1. **The Buck Converter Inductance**

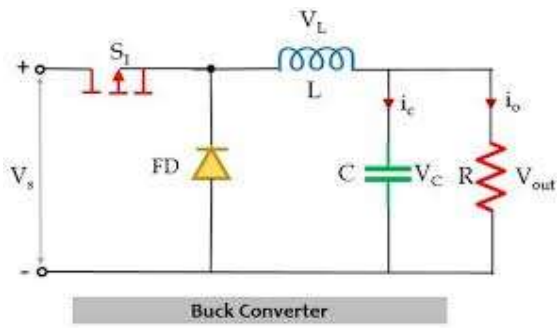

The voltage across the inductor is given by the formula:

$$V_L = L \cdot \frac{di}{dt}$$

In a buck converter, we analyze the circuit during the **Switch ON** phase to find the inductance.

Step 1: Define the Inductor Voltage (V_L)

When the high-side switch closes, the left side of the inductor is connected to the input voltage (V_{in}) and the right side is clamped to the output voltage (V_{out}).

$$V_L = V_{in} - V_{out}$$

dt is the ON time period which is given by D.T, rewriting T as $\frac{1}{f_{sw}}$

Step 2: Substitute into the Fundamental Equation

We plug our specific buck voltage, the ripple current (ΔI_L), and the ON time ($\frac{D}{f_{sw}}$) into the base inductor equation:

$$V_{in} - V_{out} = L \cdot \frac{\Delta I_L}{\frac{D}{f_{sw}}}$$

Step 3: Isolate L

Multiply both sides by the time denominator to isolate L:

$$L = \frac{(V_{in} - V_{out}) \cdot D}{f_{sw} \cdot \Delta I_L}$$

Step 4: Define the Ripple Current (ΔI_L)

To accurately set the ripple current for the buck converter, we express it in terms of total output power (P_{out}), voltage, and the target efficiency (η) of your design to account for real-world thermal losses.

We define the ripple current as a percentage ($\%_{ripple}$) of the adjusted output current:

$$\Delta I_L = \left(\frac{P_{out}}{\eta \cdot V_{out}}\right) \cdot \backslash\%_{ripple}$$

Step 5: The Final Buck Formula

Substitute that ripple definition back into the main equation to get your complete, production-ready design formula:

$$L = \frac{(V_{in} - V_{out}) \cdot D}{f_{sw} \cdot \left[\left(\frac{P_{out}}{\eta \cdot V_{out}}\right) \cdot \backslash\%_{ripple}\right]}$$

---

2. The Boost Converter Inductance

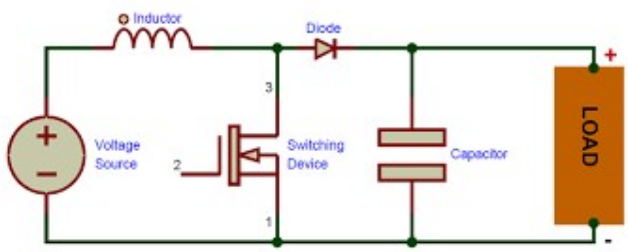

For the boost converter, we also analyze the circuit during the **Switch ON** phase, but the physical placement of the inductor changes the math.

Step 1: Define the Inductor Voltage (V_L)

In a boost converter, the inductor is physically located between the input supply and the main switch. When the switch closes to ground, the full input voltage is dropped entirely across the inductor.

$$V_L = V_{in}$$

Step 2: Substitute into the Fundamental Equation

Plug this voltage, the ripple current, and the ON time into the base equation:

$$V_{in} = L \cdot \frac{\Delta I_L}{\frac{D}{f_{sw}}}$$

Step 3: Isolate L

Rearrange the equation to solve for the required inductance:

$$L = \frac{V_{in} \cdot D}{f_{sw} \cdot \Delta I_L}$$

Step 4: Define the Ripple Current (ΔI_L)

In a boost converter, the inductor is on the *input* side, so the ripple percentage must be based on the **average input current (I_{in})**, not the output current.

First, calculate the average input current based on your required output power and target efficiency:

$$I_{in} = \frac{P_{out}}{\eta \cdot V_{in}}$$

Then, apply your target ripple percentage to that input current:

$$\Delta I_L = I_{in} \cdot \%_{ripple}$$

Step 5: The Final Boost Formula

Substitute this into the isolated L equation:

$$L = \frac{V_{in} \cdot D}{f_{sw} \cdot \left(\frac{P_{out}}{\eta \cdot V_{in}} \cdot \%_{ripple}\right)}$$